Side Mounted EaziRail Centre Post - 1100mm - Anodised (Model: K.EZAL.SM.CNT.AN)

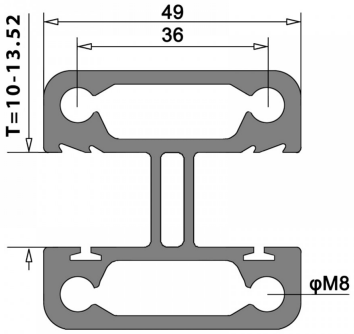

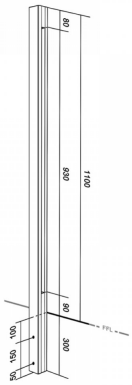

- Pre fabricated balustrade post that is suitable for 10mm - 13.52mm thick glass.

- Extremely fast and simple to install. These posts can be finished on top in three different ways depending on your preference.

- A handrail can be easily installed, the post can have a flat cap with the glass below it or the glass can be higher than the post and a slotted cap can be installed.

- These post provide a really great windbreak as there are a lot less gaps than traditional stainless steel posts.

- Bespoke size posts can be manufactured to suit your requirements.

Attributes:
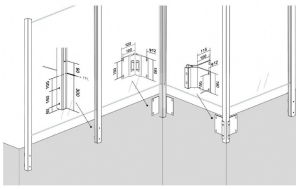
Product Code:	K.EZAL.SM.CNT.AN
Unit Of Sale:	Each