Dynamik Door Hinge - Anodised - Square Corners (Model: G.DK.SG.SA.008.SQ)

- The Square integrated door hinges work with the H-type, Z- type and L-type aluminium door frames.
- Suitable for glass thicknesses of 8-10mm.
- Recommended max door height - 2400mm.
- Above a height of 2200 mm, it is recommended to use 3 hinges.
- Available in Black, Stainless steel effect, and an Anodised finish.
- The maximum recommended weight of glass doors using these hinges:

2 hinges = 80kg
3 hinges = 100kg

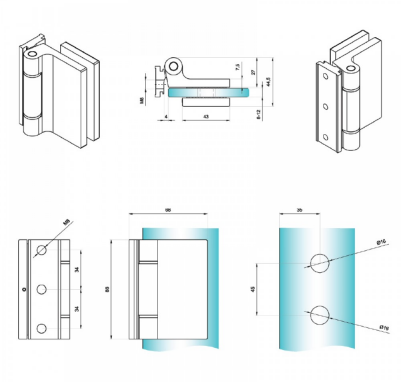

Attributes:

Product Code:	G.DK.SG.SA.008.SQ
Unit Of Sale:	Each